VIDEOMAN

VIDEOMAN is a registered trade mark of EOS Australia Pty Ltd

Designed, imported and distributed by VIDEOMAN Systems Co.

SECURITY VIDEO INTERCOM

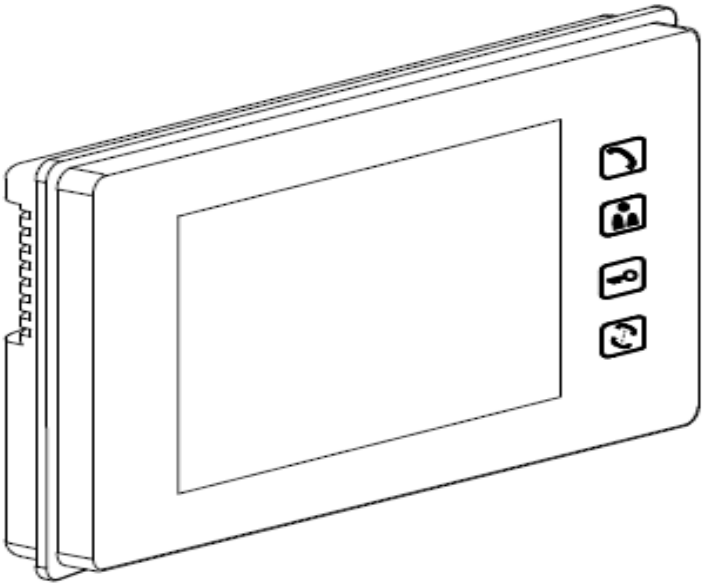

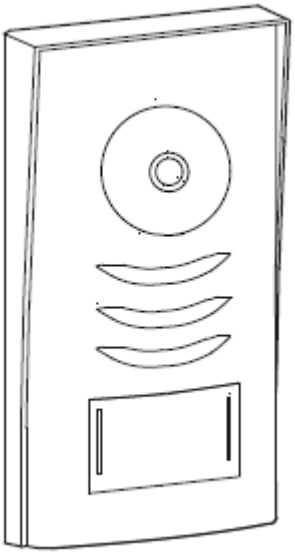

FUTURO-7.2

Wide Screen Intercom Kit

(Inc. FUTURO-7.2M, FUTURO-7.2C, FUTURO-7PS)

FUTURO -7.2M

Kit Monitor only

(Inc.FUTURO-7.2M, FUTURO-7PS)

Indoor Monitor FUTURO-7.2M Installation guide

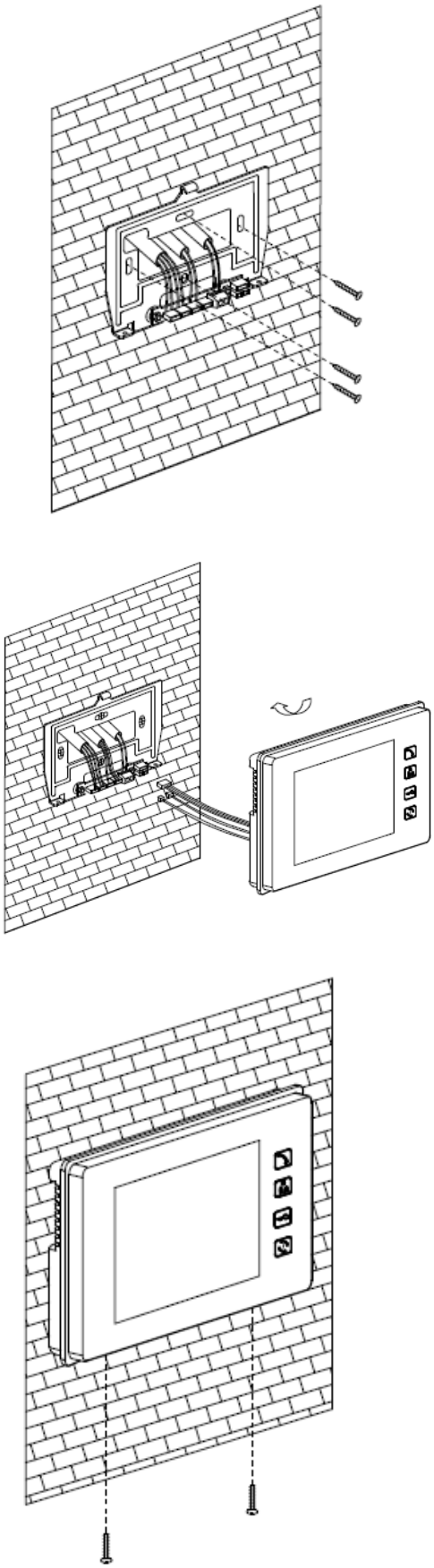

Fig.1

Install the door stations about 1.55M~1.60M from the ground

FUTURO-7.2C Door Station Installation guide
Surface mount with optional FUTURO-7.2WH

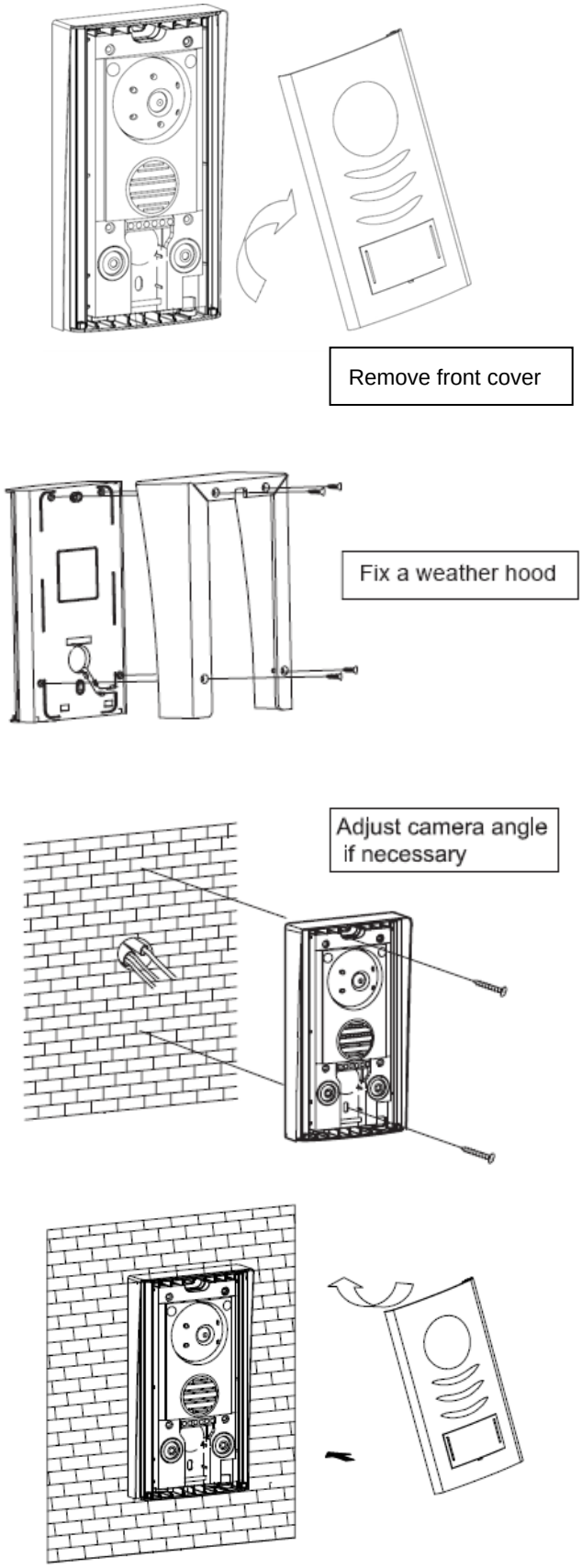

Fig.2

Install the door stations about 1.55M~1.60M from the ground

FUTURO-7.2C Door Station Installation Guide-Surface mount with optional FUTURO-7.2WH

I

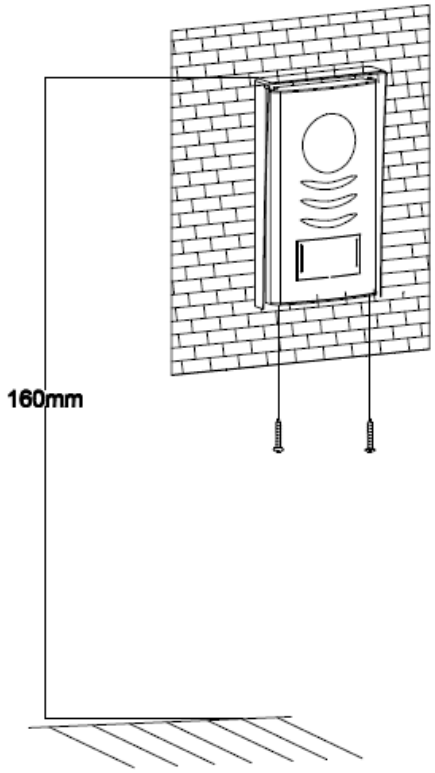

Fig.3

Install the door stations about 1.55M~1.60M from the ground.

Keep the units away from snow, rain and direct sunlight

Dimensions

- Overall size of front panel :
  99mm(W)x181mm(H)x31mm(D)

FUTURO -7.2 Door Station Installation and a Name Tag Holder assemble guide

1. Write desired name on a white plastic label provided.
2. Insert white plastic label to the clear plastic label holder.
3. Remove the front aluminum cover from a door station.
4. Insert above name tag holder to the black plastic from the back side of the aluminum.
5. Install the door station back body to a wall.
6. Assemble the aluminum cover with 2 screws provided from the bottom.
   (Warning !! Be careful not to screw into a microphone hole)

Description of Monitor FUTURO-7.2M features

Fig.4

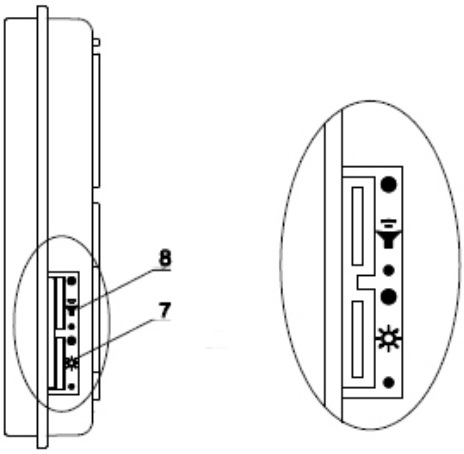

Fig.5

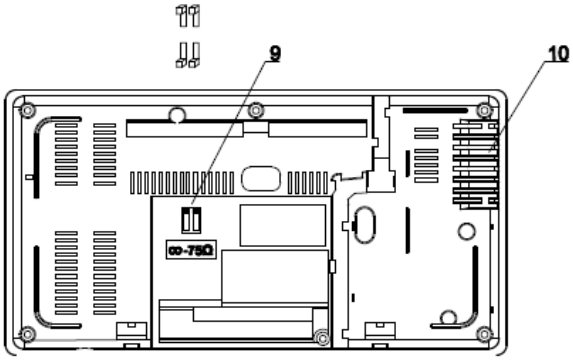

Fig.6

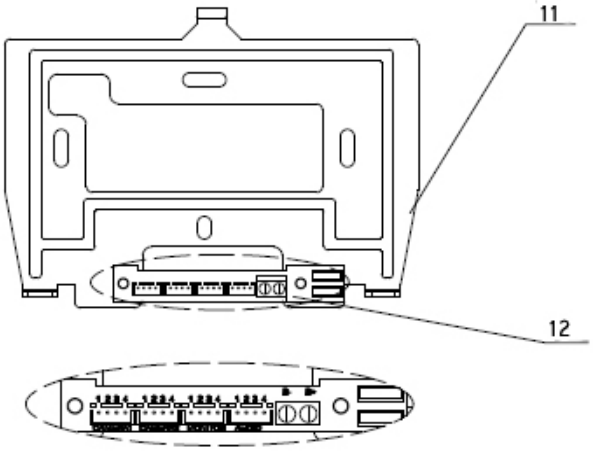

Fig.7

1. Screen
2. TALK/OFF button
   When it rings it is activate a communication line and also to turn the screen off.
3. MONITOR/SWITCH button
   Press to turn on the monitor manually.
   When it is on, you can switch the screen from one door station to the other. To turn off, press TALK button twice.
4. DOOR OPEN button / Changing Ring Tone
   Press to open the entrance door during a conversation.
   When the monitor screen is off, press-and-hold this button for 3 seconds to change the ring tone then
   press the DOOR OPEN button to set the ring tone.
5. Interphone button (Refer to page 13) communication.
6. Microphone.
7. Brightness adjustment
   Allows you to adjust the brightness.
8. Ring Tone Volume
   Allows you to adjust the ring tone.
9. Master/Slave Settings
   The monitor that is connected to any camera MUST set its' two DIP switches to MASTER position.
   Rest of the monitor's two DIP switches must be set to SLAVE position.
10. Speaker
11. Wall mount bracket
13. Connection Terminal Description

    1) 4P – Camera 1
       1. Audio 2.GND 3.B+ 4.VIDEO
    2) 4P – Camera 2
       1. Audio 2.GND 3.B+ 4.VIDEO
    3) 4P – slave Monitor
       1.SV(VIDEO) 2.SA(AUDIO) 3.DATA 4.GND
    4) 4P – slave Audio
       1.B+ 2.AUDIO 3.DATA 4.GND
    5) 2P – Power
       1.B- 2.B+

Description of Door Station FUTURO-7.2 features

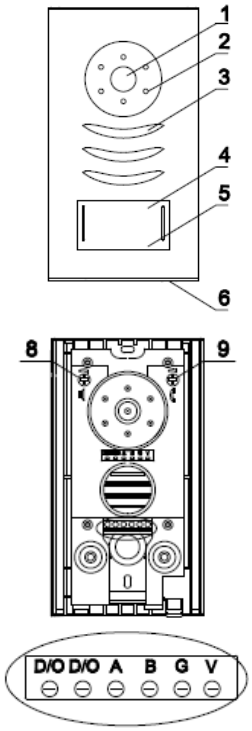

Fig.8

1. CCD Camera
2. White LEDs for night vision
3. Speaker
4. Name Plate
5. CALL Button
6. Microphone
7. Cable terminals to monitor

   A (Audio), G(Ground), B(DC10V),

   V(Video) to Monitor

   DO1 & DO2 : Voltage-free Normally Open

   Door open contact

WARNING! The following variable registers should be adjusted qualified technicians ONLY

8. Speaker volume on the Door Station
9. Microphone sensitivity on the Door Station

Description of Power Supply FUTURO-7PS

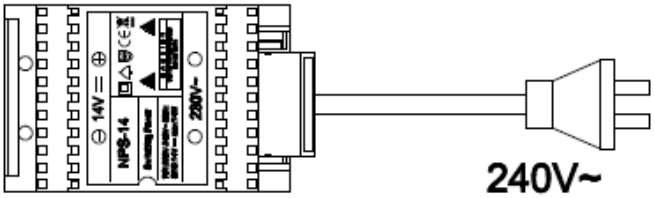

Fig.10

Switching power supply

Primary: AC240V 50Hz

Secondary: DC14V 1.5A

IMPORTANT!! Please read page 13 & 14 for cable requirements BEFORE running cables

System Connection with one camera and one monitor

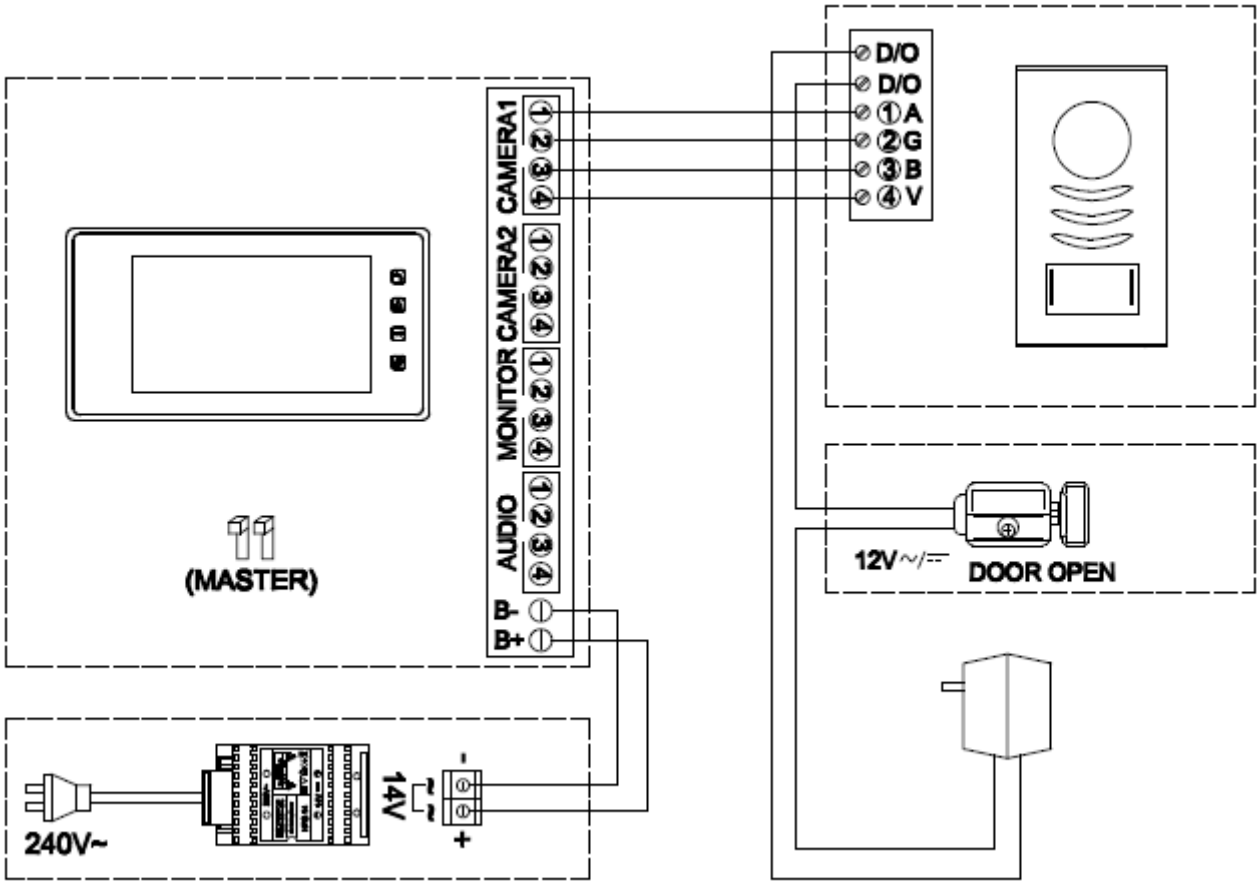

Fig.11

System connection with one camera and one monitor and one audio handset

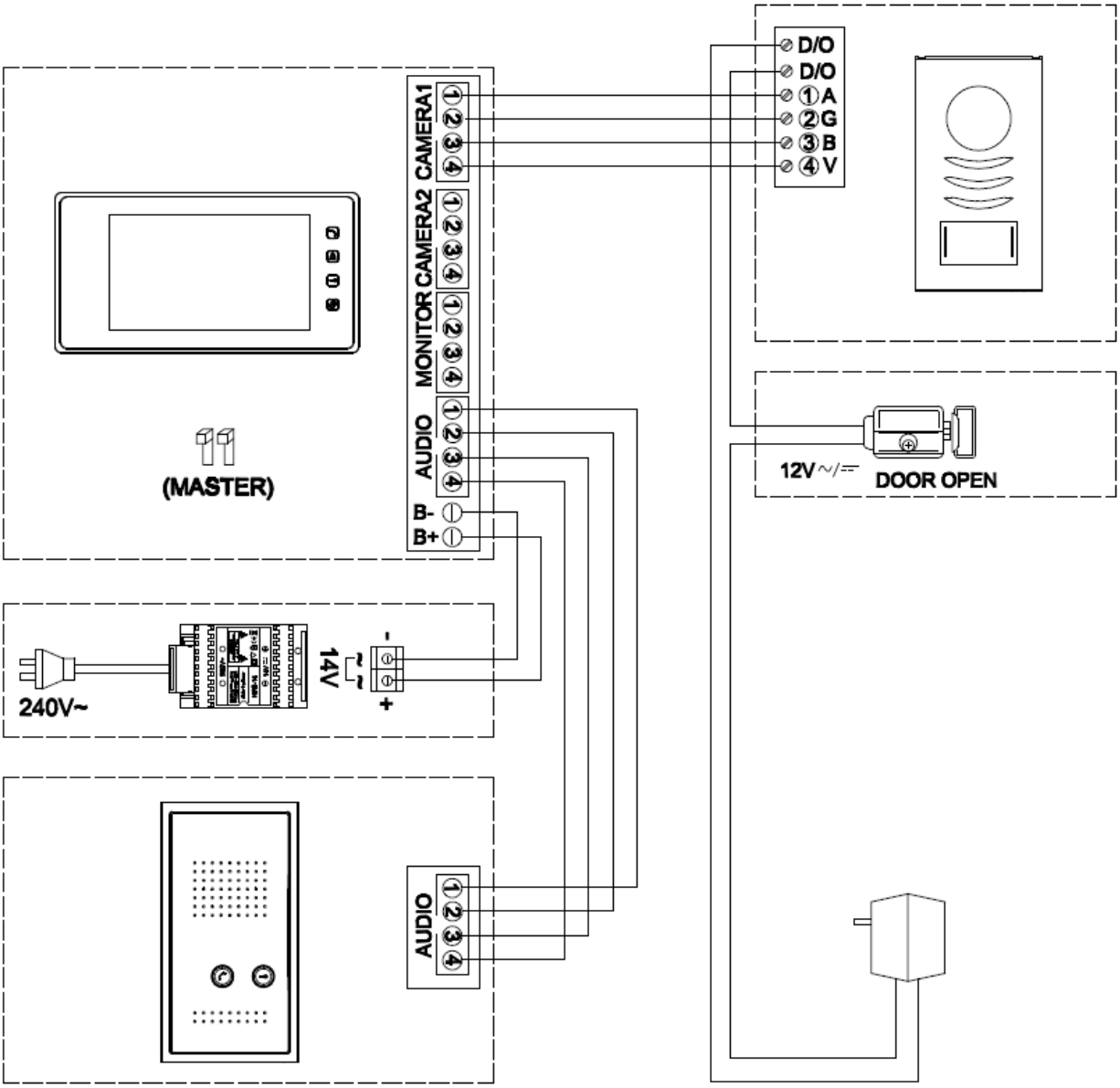

Fig.12

IMPORTANT!! Please read page 14 & 15 for cable requirements BEFORE running cables

System connection with one camera and two monitors

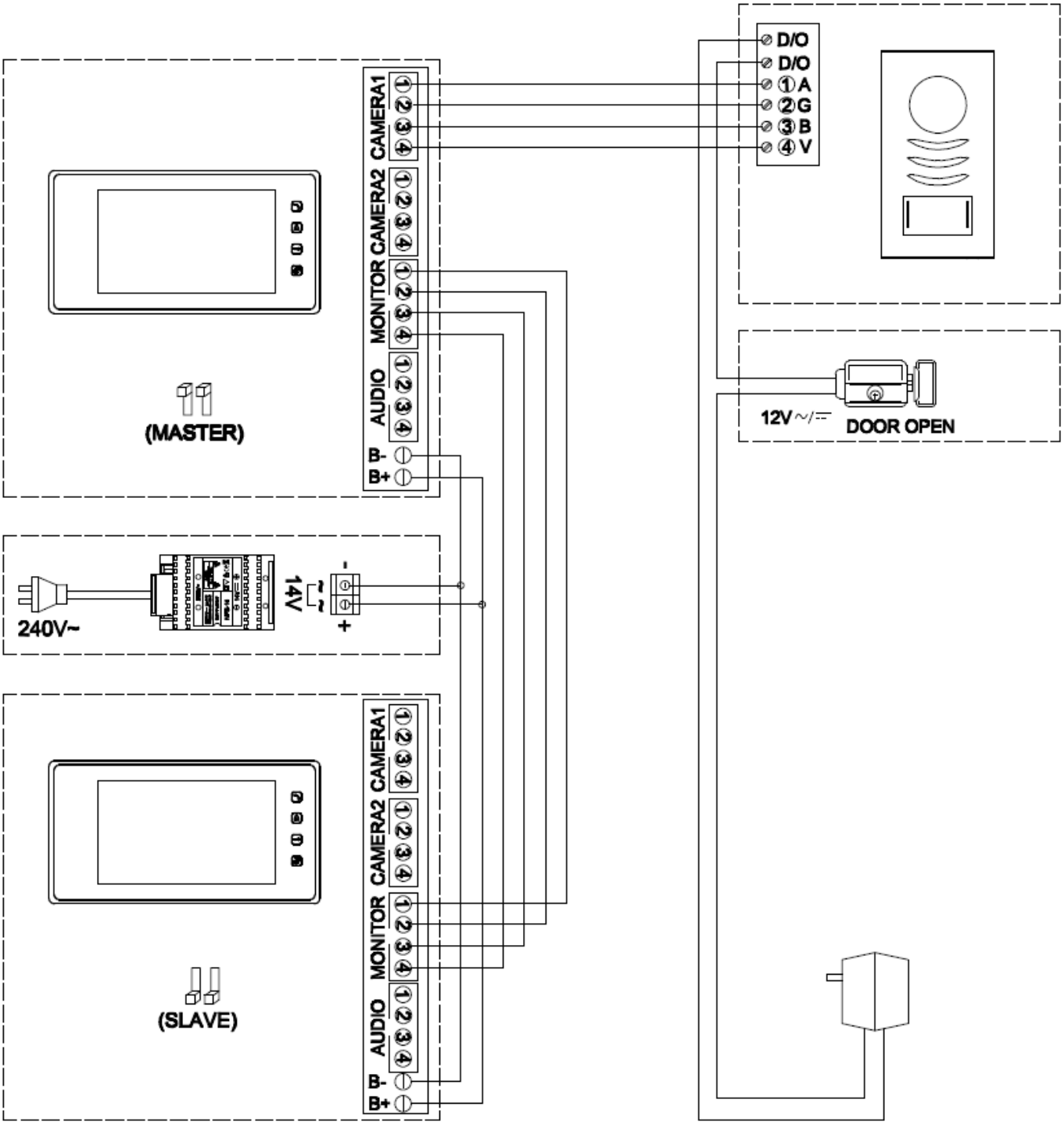

Fig.13

IMPORTANT!! Please read page 14 & 15 for cable requirements BEFORE running cables

System Connection with two cameras and two monitors

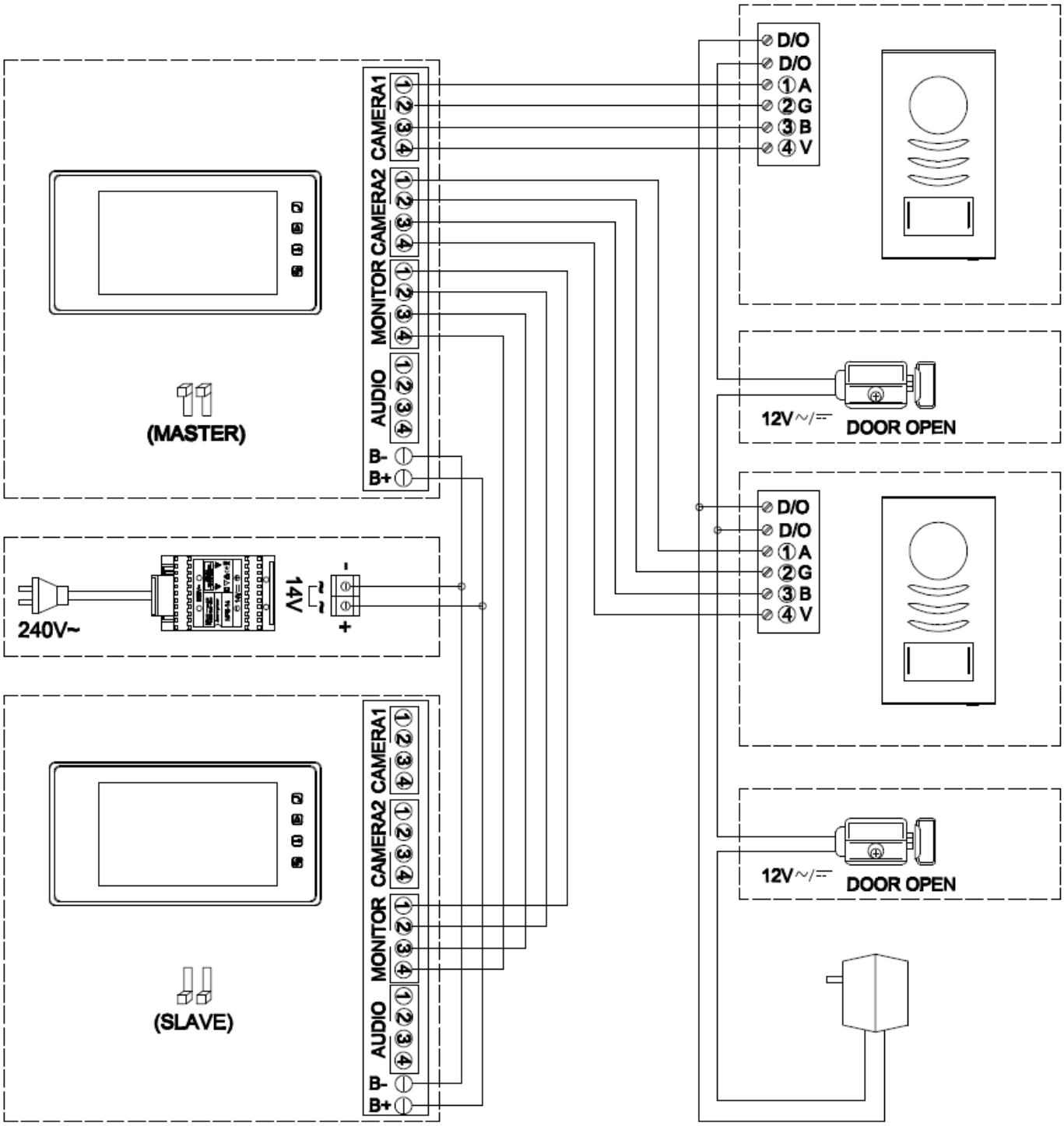

Fig.14

IMPORTANT!! Please read page 14 & 15 for cable requirements BEFORE running cables

System Connection with two cameras and one monitors and one audio handset

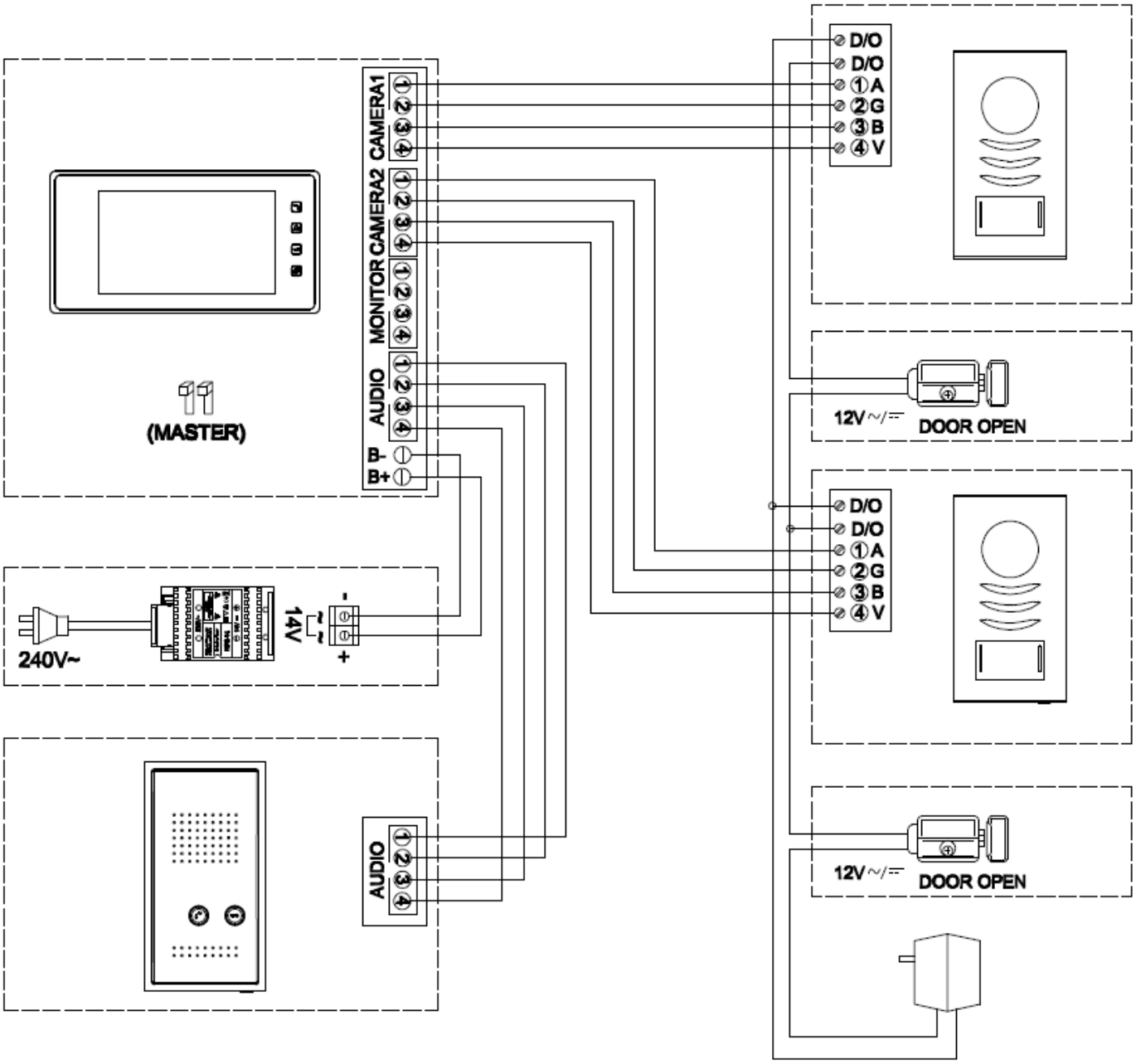

Fig.15

IMPORTANT!! Please read page 14 & 15 for cable requirements BEFORE running cables

System Connection with two cameras and two monitors and one audio handset

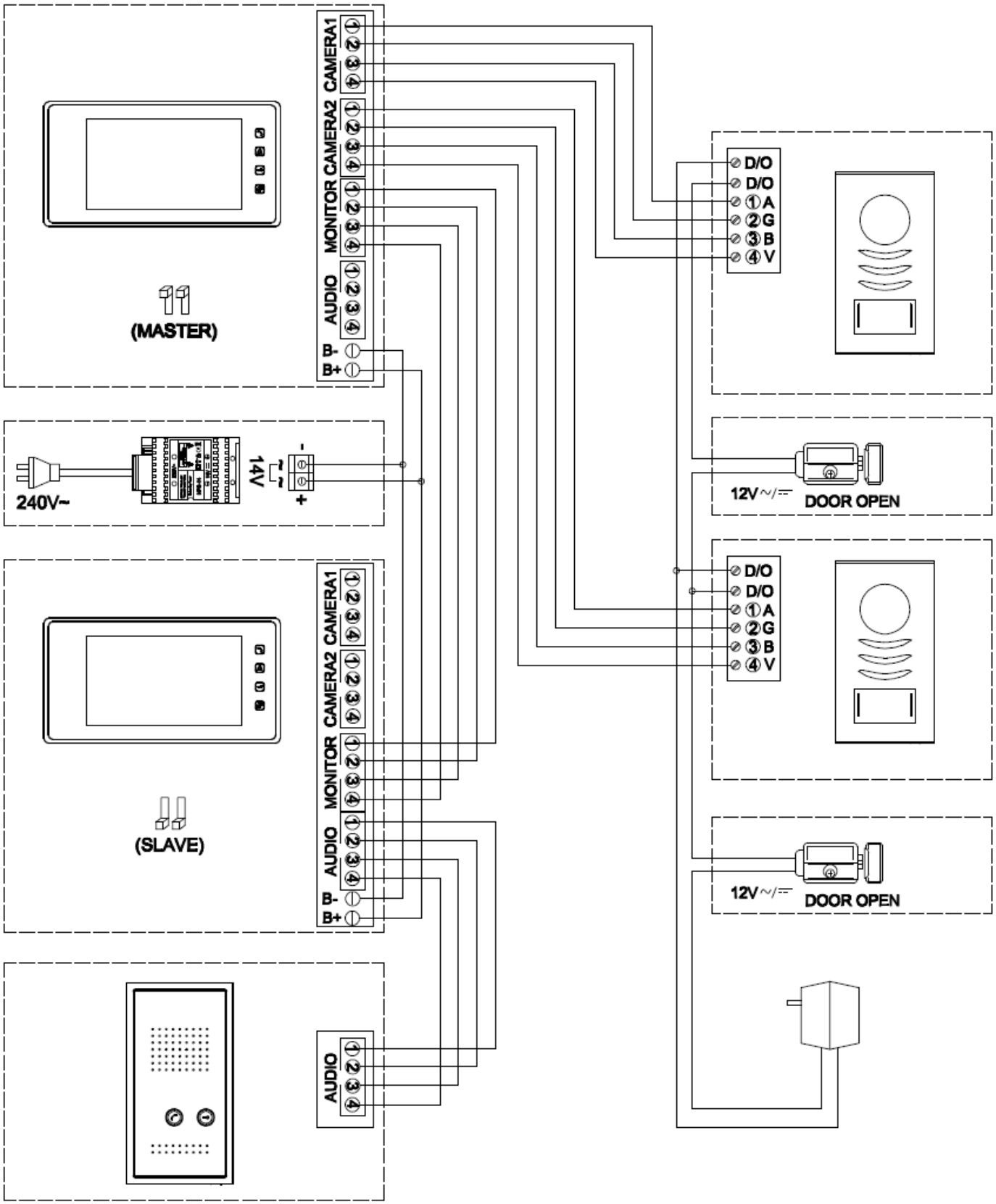

Fig.16

IMPORTANT!! Please read page 14 & 15 for cable requirements BEFORE running cables

System Connection with two cameras and one monitor and three audio handsets

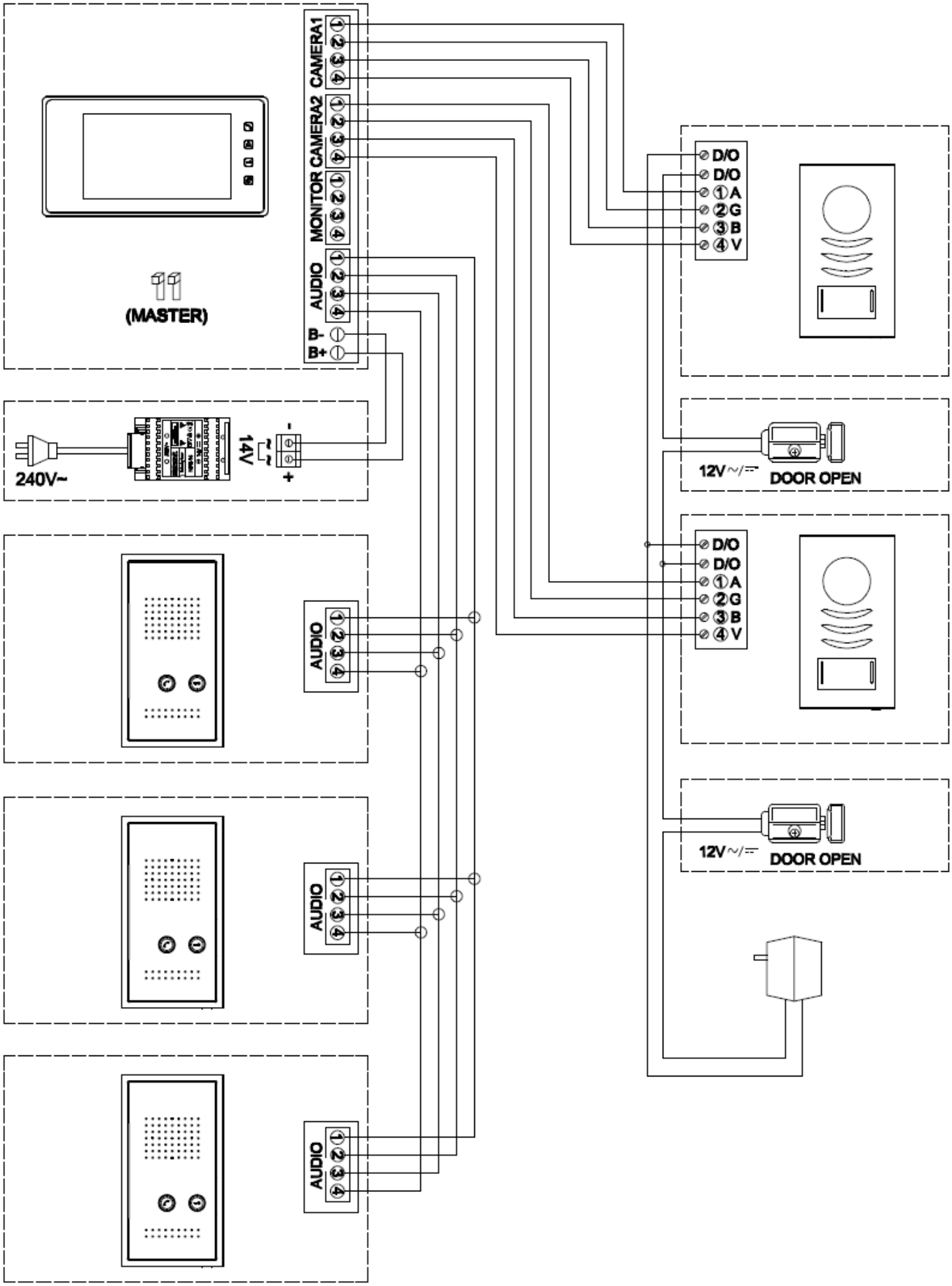

Fig.17

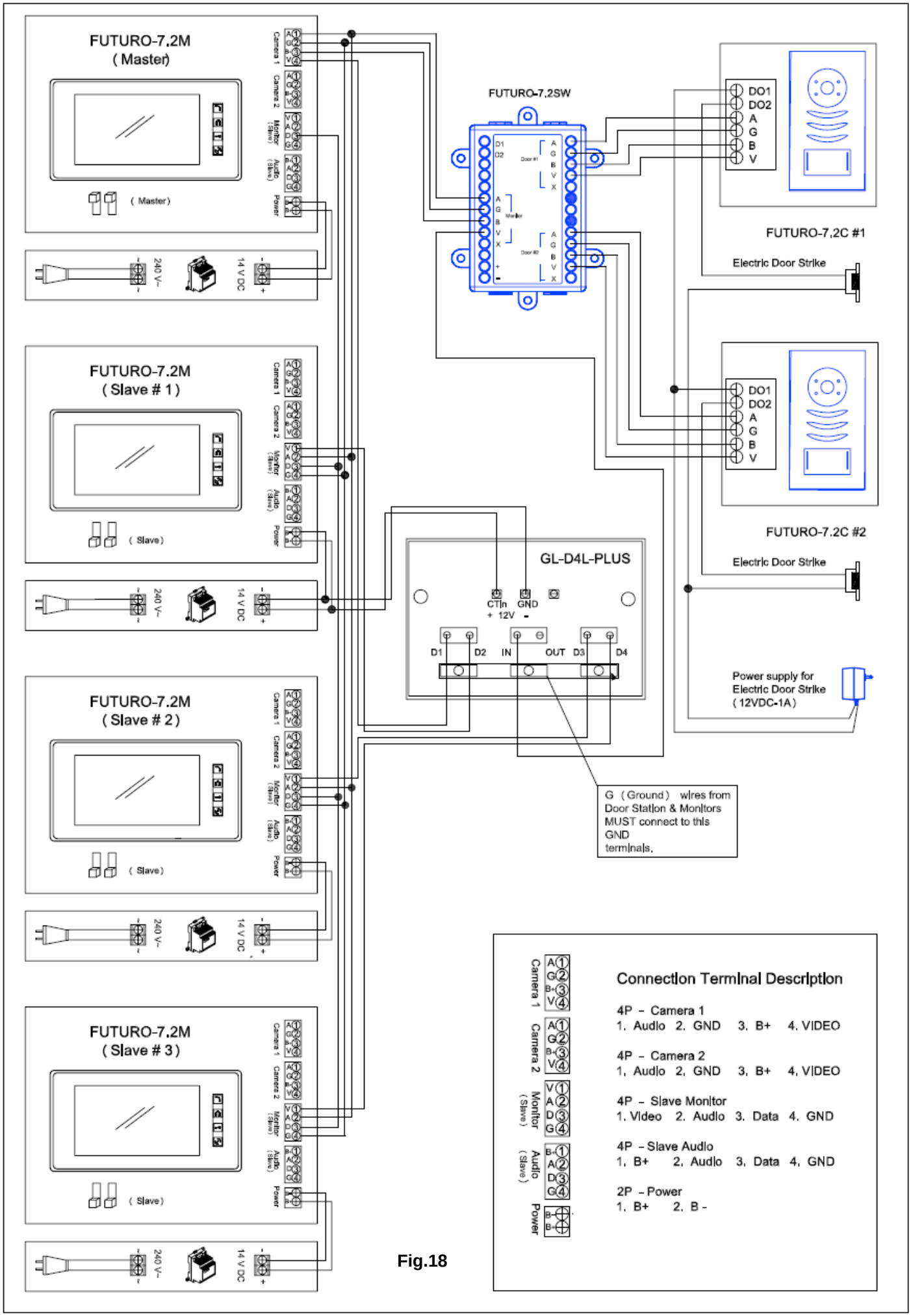
FUTURO-7.2M
(Master)
(Master)
FUTURO-7.2M
(Slave # 1)
(Slave)
FUTURO-7.2M
(Slave # 2)
(Slave)
FUTURO-7.2M
(Slave # 3)
(Slave)
Camera 1
Camera 2
Monitor (Slave)
Audio (Slave)
Power
240 V~
14 V DC
FUTURO-7.2SW
Door #1
Door #2
Master
DO1
DO2
A
G
B
V
FUTURO-7.2C #1
Electric Door Strike
FUTURO-7.2C #2
Electric Door Strike
GL-D4L-PLUS
CTIn
GND
+ 12V -
D1
D2
IN
OUT
D3
D4
Power supply for
Electric Door Strike
(12VDC-1A)
G (Ground) wires from
Door Station & Monitors
MUST connect to this
GND
terminals.
Connection Terminal Description
4P - Camera 1
1. Audio 2. GND 3. B+ 4. VIDEO
4P - Camera 2
1. Audio 2. GND 3. B+ 4. VIDEO
4P - Slave Monitor
1. Video 2. Audio 3. Data 4. GND
4P - Slave Audio
1. B+ 2. Audio 3. Data 4. GND
2P - Power
1. B+ 2. B -

Fig.18

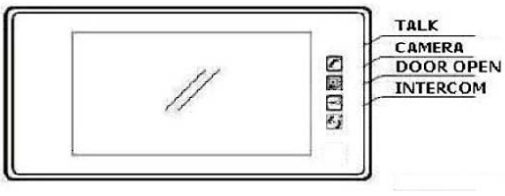
TALK
CAMERA
DOOR OPEN
INTERCOM

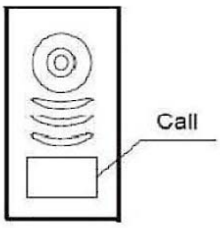
Call

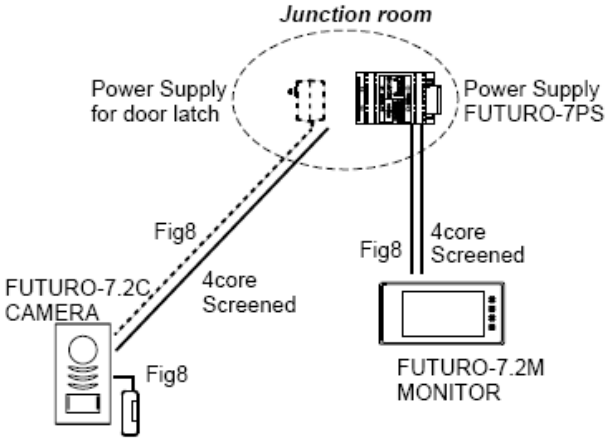

Fig.20

An additional power supply and Fig8 Cable is required for door strike operation (Indicated as broken lines on the diagrams)

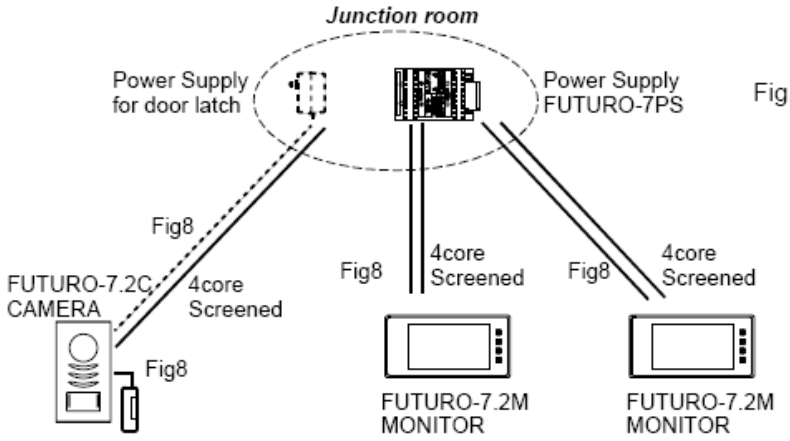

Fig.21

Cable requirement

Based on the distance from a camera to the furthest monitor,

■ < 20M : CAT5 cable

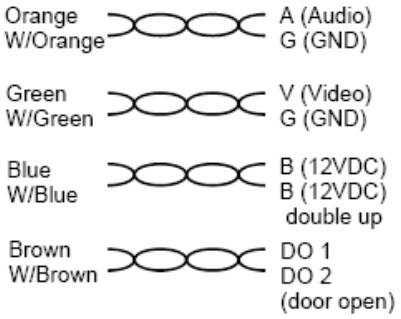

CAT5 wire configuration

Fig.22

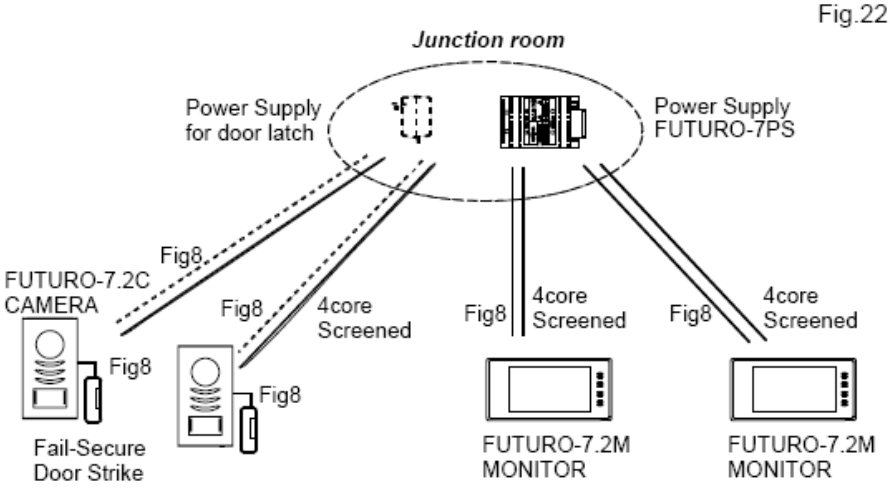

■ < 50M :

14/020 (0.44mm^2) shielded cable

(connect shield to G)

AND

RG-59/U for video signal

(connect core to V & shield to G)

■ < 100M :

24/020 (0.44mm^2) shielded cable

(connect shield to G)

AND

RG-59/U for video signal

(connect core to V & shield to G)

■ > 100M :Contact your supplier

NOTE

Fig 8 : 2Core 24/020 (= 2Core 0.75mm^2)

Junction room : Electrical switch room, junction room or ceiling where all wires are joined.

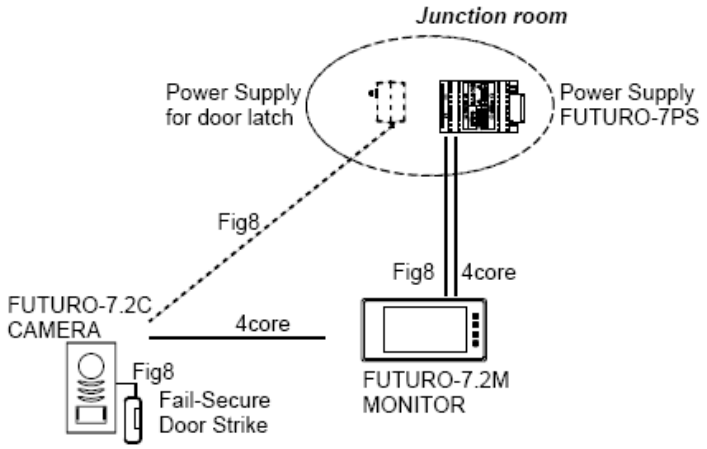

Fig.23

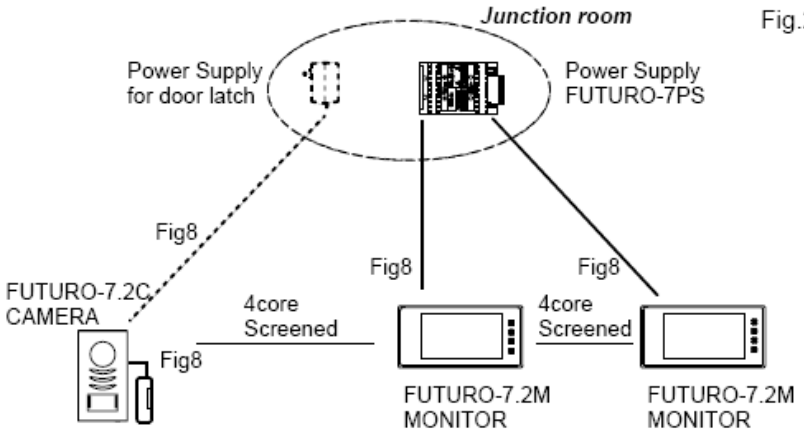

Fig.24

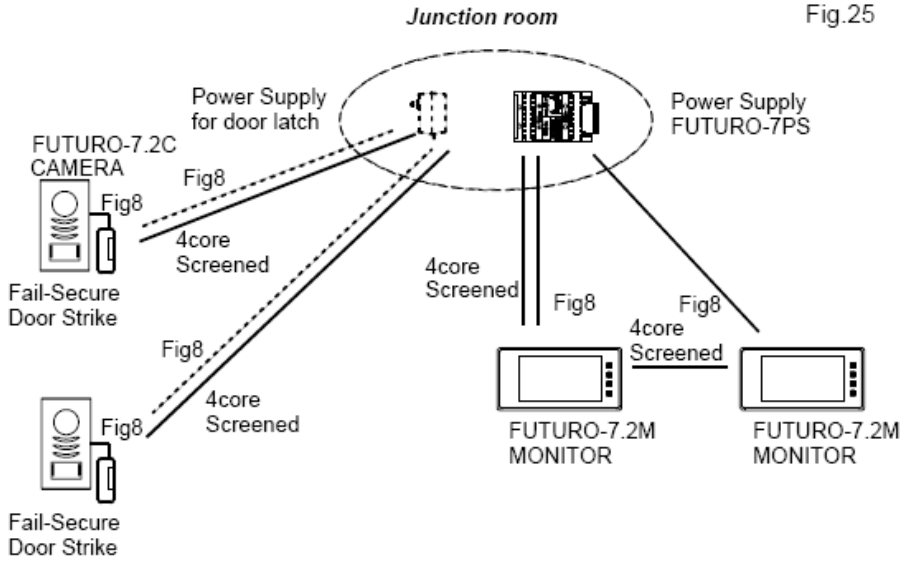

Fig.25

NOTE :

Fig 8 : 2Core 24/020 (= 2Core of 0.75mm^2)

Junction room : electrical switch room, junction room, ceiling

MEMO

MAINTENANCE

1. All components should be protected from violent vibration, impacting, knocking and dropping.
2. If necessary, clean the lens and screen with dampen soft cotton cloth do not use chemical cleaning agent.
3. Image distortion may occur if the monitor is installed near microwave ovens, TVs, computers, DC/AC adaptors or any other electro magnetic field generating appliances.
4. Keep all monitors and cameras away from high temperature, dust, caustic and oxidation gas.
5. Use only with the FUTURO-7PS power supply which is supplied by the authorised VIDEOMAN supplier.
6. Pay attention to the high voltage inside the products. Please ensure this unit is only serviced by qualified professionals.

TECHNICAL SPECIFICATIONS

1. Talk auto-off time: 60 seconds
2. Surveillance auto-off time: 30 seconds
3. Power supply for indoor monitor : 14V DC 1.0Amp
4. Power for Door Station: 10V DC (Supplied by indoor monitor)
5. Power consumption: Standby 2W, Max. 14W
6. Monitor screen: 7" Colour TFT LCD, 1024(H) x 234(V)
7. Camera Lens: 3.6mm, 51 degree horizontal 41 degree vertical visual angle
8. Image sensor : 1/4" CCD, 270k Pixels
9. Resolution: >380 TV lines
10. Video signal: 1Vp-p, 75Ω
11. Connection mode: 4 wire, polarity conscious
12. Door strike operation : Voltage-free Relay output from the Door Station
13. Door strike operation time : controlled by Door open button on Monitor
14. S/N Ratio : Video 50dB, Audio 40dB

WARRANTY STATEMENT

This equipment is warranted to be free from defects in material and workmanship for a period of twelve months from the date of purchase as indicated on the proof of purchase and/or by serial number on the product.

Defective units returned by the purchaser at his own expense during this period will be repaired (or replaced at the option of the distributor) with an equivalent piece of refurbished and tested equipment. The repaired or replaced equipment is then warranted for the balance of the initial warranty period or for thirty (30) days, whichever is longer.

The repair or replacement will be without charge provided that the equipment has not been subjected to electrical of physical misuse or to unauthorised repair or modification.

The foregoing warranty is in lieu of all other warranties, express or implied, including, but not limited to, merchantability or fitness for a particular purpose.

The purchaser's exclusive remedy with respect to any and all losses or damages resulting from any cause whatsoever, shall be repair or replacement as specified above.

Distributor shall in no event be liable for any consequential or incidental damages, however occasioned, whether by negligence or otherwise. No suit or action shall be brought against manufacturer more than one year after the accrual of the cause of action therefore. No agent, employee or representative of the distributor nor any other person is authorised to modify this warranty in any respect. This warranty gives you specific legal rights and you may also have other rights which vary from state to state.